TRANSMISSION TYPE	GRADE	Part No.	PRODUCT NAME
MULTIMODE	Standard Loss	90A11553	12MT-PF-M(NB)-T1.25-L4(-)
		90A11566	12MT-PF-M(NB)-T1.25-L4(-)-WOB

△2

△2

12MT	-	P	F	-	M	(NB)	-	T1.25	-	L4	(-)	-	WOB
①		②	③		④			⑤		⑥			⑦

△2

① : Connector fiber count	-	12MT	:	12 fiber counts MT ferrule
② : MT Material	-	P	:	PPS
③ : Polishing	-	F	:	For Flat Polishing
④ : Grade	-	M	:	Standard Loss Multimode
⑤ : Thickness	-	T1.25	:	1.25 mm
⑥ : Length	-	L4	:	4 mm
⑦ : Condition	-	WOB	:	Without Boot

【MT Ferrule】

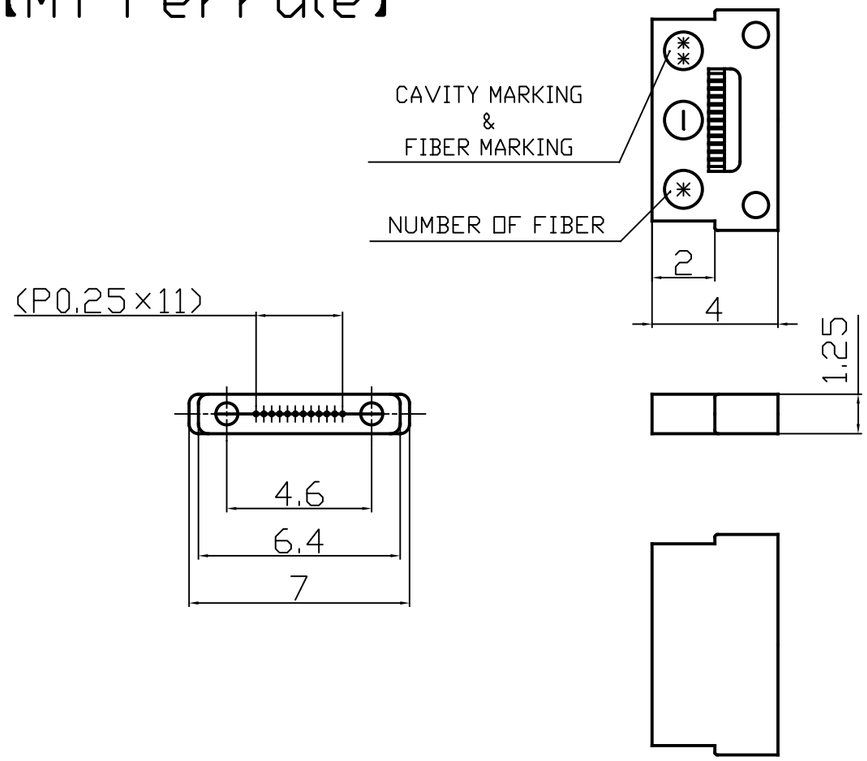

【MT Boot】

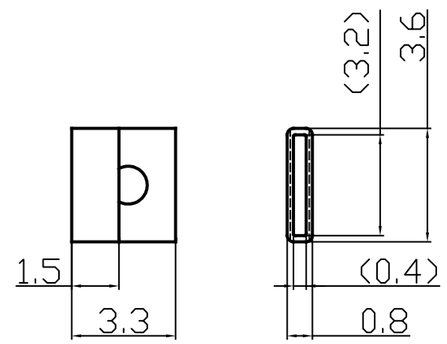

NOTES;
1. This document shows the outline of our MT ferrule and boot with the Parts Number table.
Please contact us for customers' drawing to show specific dimensions if necessary.

REV	DATE	REVISION RECORD	BY
2	2026.07.09	Additions to the listed product lineup and change to product name.	H.Ohta
1	2026.04.21	Create a new.	H.Ohta

APPROVED BY	T.Saitoh	UNIT	mm	DATE	21, Apr. 2026
SECTION HEAD	H.Ohta			NAME	MTCOMPACT Slim&Short series Lineup
CHIEFING		SCALE	5/1		
CHECKED BY					
DESIGNED BY	H.Ohta	TRIANGLE PROJECTION			
COPIED BY					
HAKUSAN				DRAWING No.	90A11677