TRANSMISSION TYPE	GRADE	Part No.	PRODUCT NAME
SINGLE-MODE	Master Loss	90A11629	12MT-PA-Master(NB)
	Super Low Loss	90A11427	12MT-PA-SLS(NB)-SI
		90A11536	12MT-PA-SLS(NB)-SI-WOB
	Standard Loss	90A11634	12MT-PA-S(NB)-VP
		90A11635	12MT-PA-S(NB)-VP-WOB
MULTIMODE	Super Low Loss	90A11652	12MT-PA-SLM(NB)-VP
		90A11524	12MT-PF-SLM(NB)-VP
		90A11525	12MT-PF-SLM(NB)-VP-WOB
	Standard Loss	90A11632	12MT-PF-M(NB)-VP
		90A11633	12MT-PF-M(NB)-VP-WOB

12MT	-	P	A	-	SLS	(NB)	-	SI	-	WOB
①		②	③		④			⑤		⑥

① : Connector fiber count	-	12MT	:	12 fiber counts MT ferrule
② : MT Material	-	P	:	PPS
③ : Polishing	-	A	:	For Angle polishing
		F	:	For Flat Polishing
④ : Grade	-	Master	:	Master Loss Single-mode
		SLS	:	Super Low Loss Single-mode
		S	:	Standard Loss Single-mode
		SLM	:	Super Low Loss Multimode
		M	:	Standard Loss Multimode
⑤ : Condition 1	-	SI	:	Sampling Inspection
		VP	:	Vacuum Packaging by Sampling Visual Inspection
⑥ : Condition 2	-	WOB	:	Without Boot

NOTES;

1. This document shows the outline of our MT ferrule and boot with the Parts Number table.
   Please contact us for customers' drawing to show specific dimensions if necessary.

【MT Ferrule】

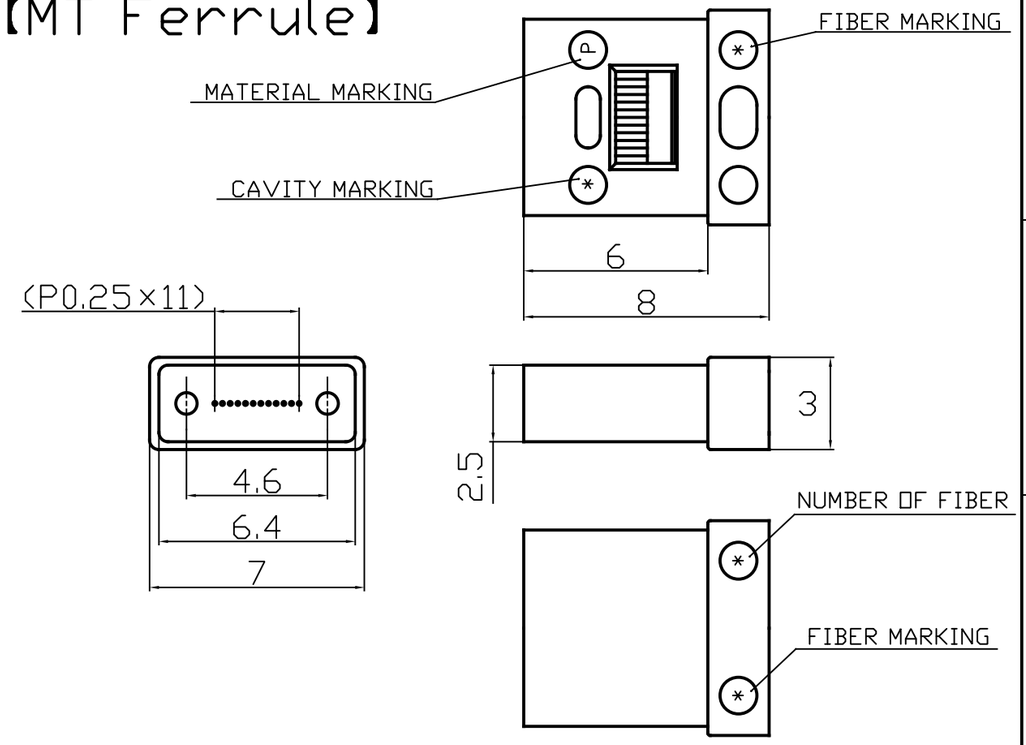

【MT Boot】

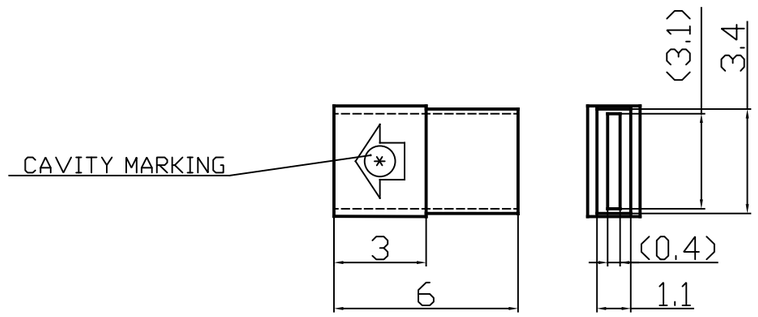

REV	DATE	REVISION RECORD	BY
1	2025.07.24	Create a new.	H.Ohta

APPROVED BY	T.Saitoh	UNIT	mm	DATE	24, Jul. 2025
SECTION HEAD	H.Ohta			NAME	12MT Connector series
CHIEFING		SCALE	5/1		Lineup
CHECKED BY					
DESIGNED BY	H.Ohta	TRIANGLE PROJECTION			
COPIED BY					
HAKUSAN				DRAWING No.	90A11655

TRANSMISSION TYPE	GRADE	Part No.	PRODUCT NAME
SINGLE-MODE	Super Low Loss	90A11619	16MT-PA-SLS(NB)-SI
		90A11613	16MT-PA-SLS(NB)-SI-WOB
	Standard Loss	90A11661	16MT-PA-S(NB)-VP
		90A11668	16MT-PA-S(NB)-VP-WOB
MULTIMODE	Super Low Loss	90A11662	16MT-PA-SLM(NB)-VP
		90A11667	16MT-PA-SLM(NB)-VP-WOB
		90A11664	16MT-PF-SLM(NB)-VP
		90A11666	16MT-PF-SLM(NB)-VP-WOB
	Standard Loss	90A11663	16MT-PF-M(NB)-VP
		90A11665	16MT-PF-M(NB)-VP-WOB

16MT	-	P	A	-	SLS	(NB)	-	SI	-	WOB
①		②	③		④			⑤		⑥

①：Connector fiber count	-	16MT	:	16 fiber counts MT ferrule
②：MT Material	-	P	:	PPS
③：Polishing	-	A	:	For Angle polishing
		F	:	For Flat Polishing
④：Grade	-	SLS	:	Super Low Loss Single-mode
		S	:	Standard Loss Single-mode
		SLM	:	Super Low Loss Multimode
		M	:	Standard Loss Multimode
⑤：Condition 1	-	SI	:	Sampling Inspection
		VP	:	Vacuum Packaging by Sampling Visual Inspection
⑥：Condition 2	-	WOB	:	Without Boot

NOTES;

1. This document shows the outline of our MT ferrule and boot with the Parts Number table.
   Please contact us for customers' drawing to show specific dimensions if necessary.

【MT Ferrule】

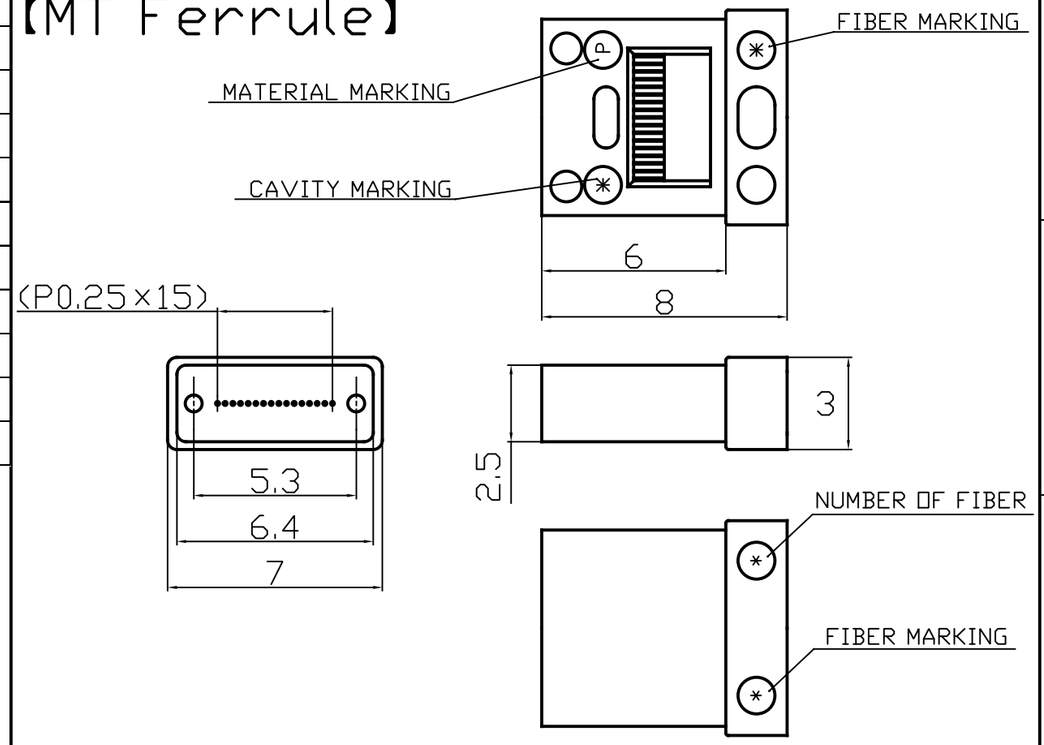

【MT Boot】

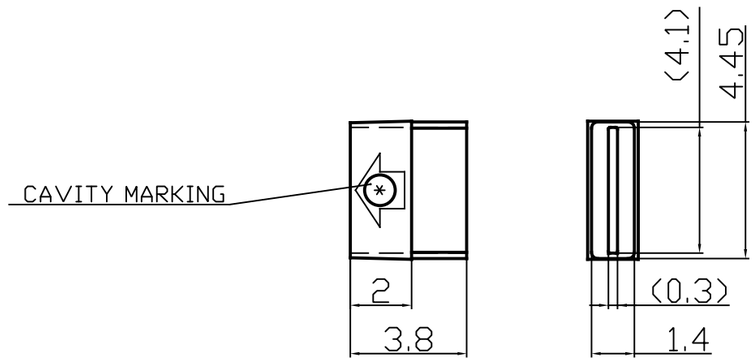

REV	DATE	REVISION RECORD	BY
2	2026.01.19	Changes to the listed product varieties.	H.Ohta
1	2025.07.24	Create a new.	H.Ohta

APPROVED BY	T.Saitoh	UNIT	mm	DATE	24, Jul. 2025
SECTION HEAD	H.Ohta			NAME	16MT Connector series
CHIEFING		SCALE	5/1		Lineup
CHECKED BY					
DESIGNED BY	H.Ohta	TRIANGLE PROJECTION			
COPIED BY					
HAKUSAN				DRAWING No.	90A11656

TRANSMISSION TYPE	GRADE	Part No.	PRODUCT NAME
SINGLE-MODE	Standard Loss	90A11450	24MT-PA-S(NB)
MULTIMODE	Super Low Loss	90A11453	24MT-PF-SLM(NB)
		90A11544	24MT-PF-SLM(NB)-WOB
	Standard Loss	90A11330	24MT-PF-M(NB)

24MT	-	P	F	-	SLM	(NB)	-	WOB
①		②	③		④			⑤

① : Connector fiber count	-	24MT	:	24 fiber counts MT ferrule
② : MT Material	-	P	:	PPS
③ : Polishing	-	A	:	For Angle polishing
		F	:	For Flat Polishing
④ : Grade	-	S	:	Standard Loss Single-mode
		SLM	:	Super Low Loss Multimode
		M	:	Standard Loss Multimode
⑤ : Condition	-	WOB	:	Without Boot

【MT Ferrule】

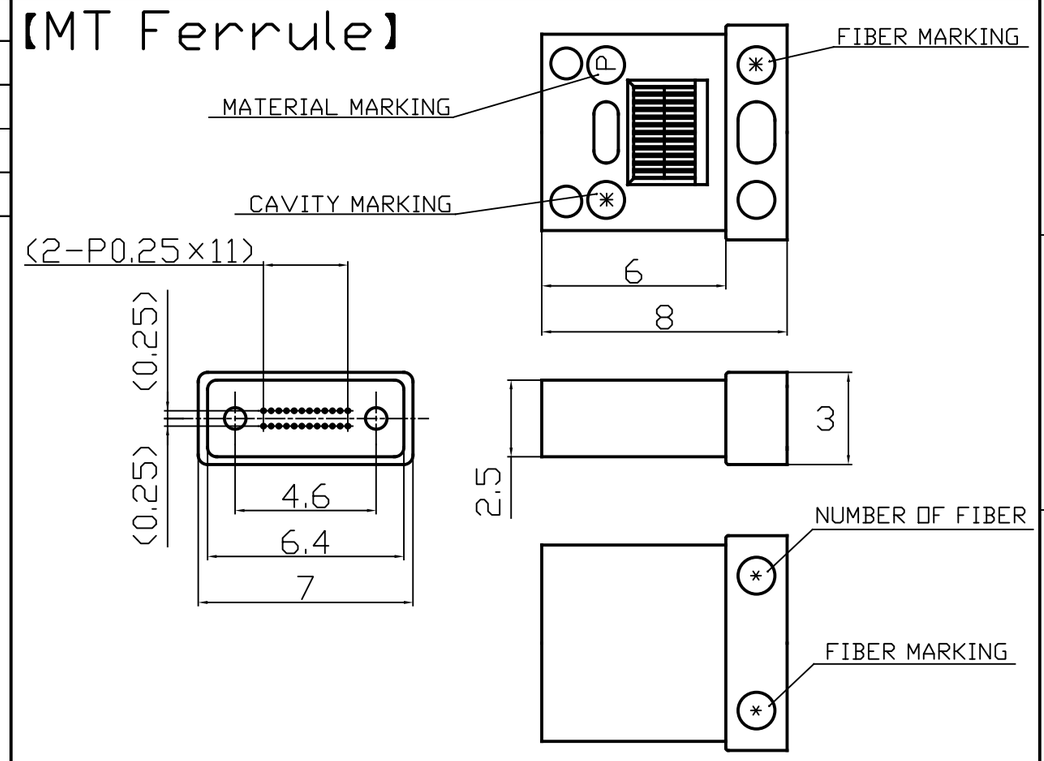

【MT Boot】

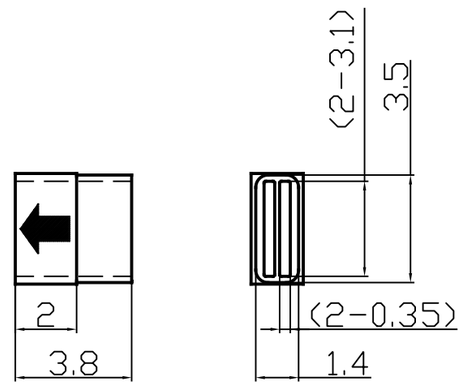

NOTES;
1. This document shows the outline of our MT ferrule and boot with the Parts Number table.
Please contact us for customers' drawing to show specific dimensions if necessary.

REV	DATE	REVISION RECORD	BY
1	2025.07.24	Create a new.	H.Ohta

APPROVED BY	T.Saitoh	UNIT	mm	DATE	24, Jul. 2025
SECTION HEAD	H.Ohta			NAME	24MT Connector series Lineup
CHIEFING		SCALE	5/1		
CHECKED BY					
DESIGNED BY	H.Ohta	TRIANGLE PROJECTION			
COPIED BY					
HAKUSAN				DRAWING No.	90A11657

TRANSMISSION TYPE	GRADE	Part No.	PRODUCT NAME
MULTIMODE	Super Low Loss	90A11648	32MT-PA-SLM(NB)
		90A11647	32MT-PF-SLM(NB)
	Standard Loss	90A11503	32MT-PF-M(NB)
		90A11504	32MT-PF-M(NB)-WOB

32MT - P F - M (NB) - WOB
① ② ③ ④ ⑤

① : Connector fiber count	-	32MT	:	32 fiber counts MT ferrule
② : MT Material	-	P	:	PPS
③ : Polishing	-	A	:	For Angle polishing
		F	:	For Flat Polishing
④ : Grade	-	SLM	:	Super Low Loss Multimode
		M	:	Standard Loss Multimode
⑤ : Condition	-	WOB	:	Without Boot

【MT Ferrule】

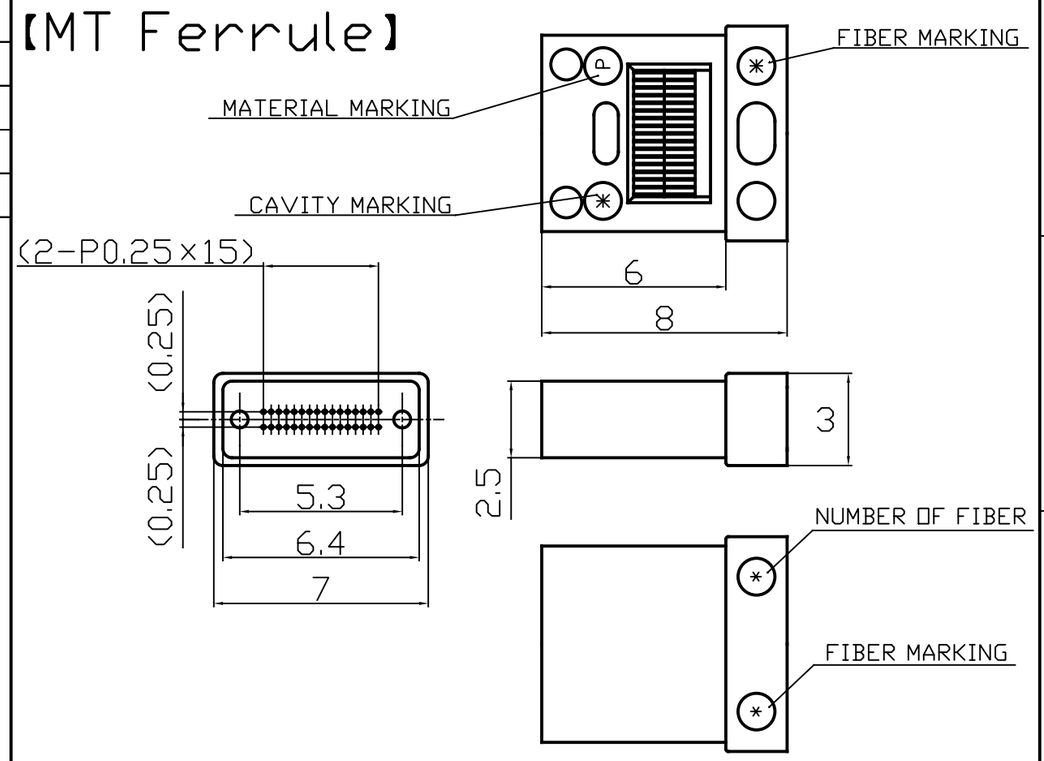

【MT Boot】

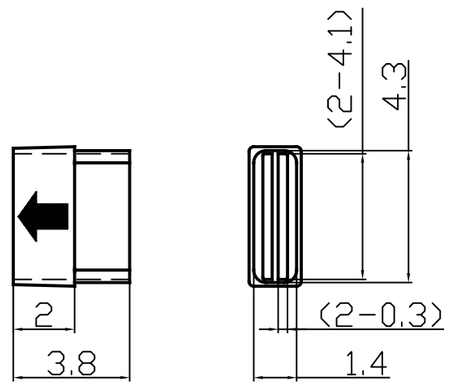

NOTES;
1. This document shows the outline of our MT ferrule and boot with the Parts Number table.
Please contact us for customers' drawing to show specific dimensions if necessary.

REV	DATE	REVISION RECORD	BY
1	2025.07.24	Create a new.	H.Ohta

APPROVED BY	T.Saitoh	UNIT	mm	DATE	24, Jul. 2025
SECTION HEAD	H.Ohta			NAME	32MT Connector series Lineup
CHIEFING		SCALE	5/1		
CHECKED BY					
DESIGNED BY	H.Ohta	TRIANGLE PROJECTION			
COPIED BY					
HAKUSAN				DRAWING No.	90A11658